RI/RO-32S

Dimensions

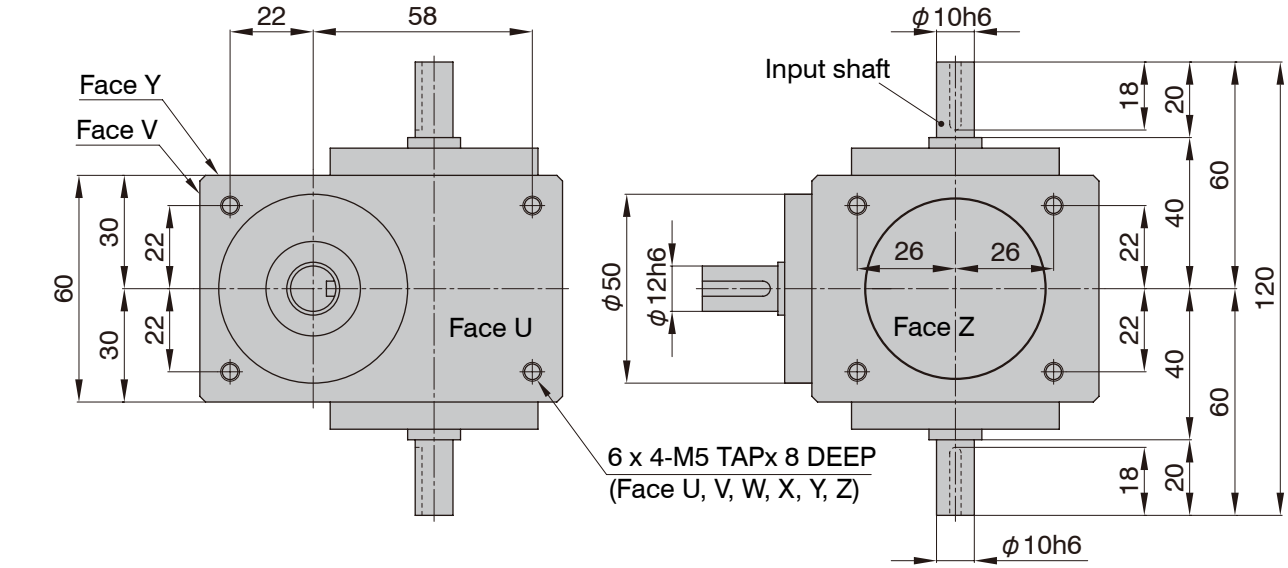

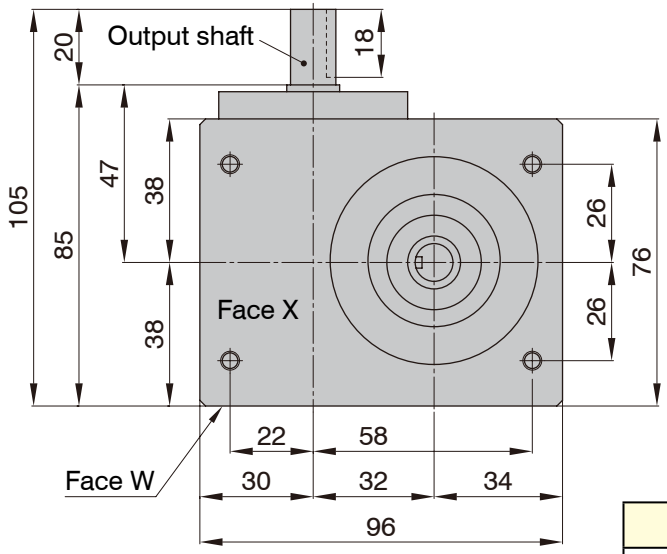

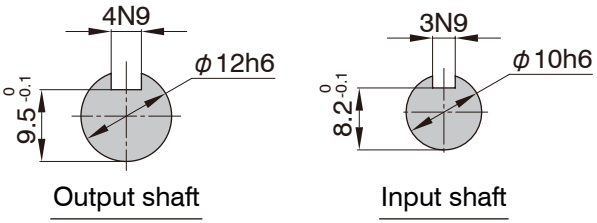

The keyway position of the input shaft in the drawing suggests the center of dwell period.

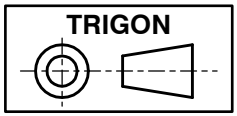

Additional Information	
Rough Prodict Weight:	2kg
Rough Lubricating Oil Capacity:	Special grease filled
Mounting Tapped Holes:	Pre-machined at all 6 faces